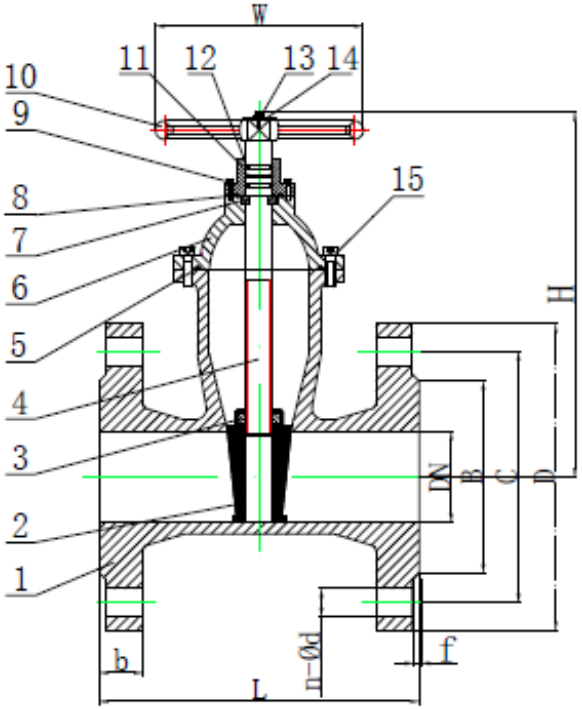

DI Resilient Seated Gate Valve Technical Data		
No.	**Description**	**Specification**
1	Nominal Dia	DN40-DN600
2	Nominal Pressure	PN10 / PN16
3	Valve design Standard	IS:14846 / BS5163
4	Face to face Standard	IS:14846 / BS5163 / DIN 3202 F4
5	Flange Standard Conformity	IS:1538 Tbl 4&6 / IS:9523 PN10
6	Testing Standard	EN12266-1
7	Epoxy Coating	Epoxy powder coating RAL5005 with minimum thickness of 250 microns inside and outside.
8	Working Temperature(Max)	120℃
9	Casting Marking	DN** GGG50 PN16 PREETAM Heat No.

Parts & Materials		
No	**Part**	**Material**
1	Body	Ductile Iron GGG50
2	Wedge	Ductile Iron GGG50 + EPDM
3	Stem Nut	Brass
4	Stem	SS420
5	Gasket	EPDM
6	Bonnet	Ductile Iron GGG50
7	Locating Ring	Brass
8	O Ring	EPDM
9	Bolts	CS Gr 8.8
10	Hand Wheel	Ductile Iron GGG50
11	Gland	Ductile Iron GGG50
12	O-Ring	EPDM
13	Bolts & Nuts	SSA2-70
14	Washer	Carbon Steel
15	Bolts	CS Gr 8.8

DN	L	D	C	B	n-d	b	f	W	H
40	165	150	110	84	4-19	18	3	160	190
50	178	165	125	99	4-19	19	3	160	205
65	190	185	145	119	4-19	19	3	160	225
80	203	200	160	133	4-19	19	3	180	250
100	229	220	180	154	8-19	19	3	200	285
125	254	250	210	184	8-19	19	3	250	330
150	267	285	240	210	8-23	19	3	250	375
200	292	340	295	265	8-23	20	3	300	480
250	330	405	350	319	12-23	22	3	330	590
350	381	520	460	429	16-23	26.5	4	490	770
400	406	580	515	480	16-28	28	4	490	850
450	432	640	565	530	20-28	30	4	490	920
500	457	670	620	582	20-28	26.5	4	590	1000
600	508	780	725	682	20-31	30	5	590	1190

Notes:

1) *All dimensions in mm*
2) *Standard tolerance as mentioned in IS:14846 applicable*
3) *We reserve the right to change without any prior notice*
4) *Other Flange Dimensions available on request.*

PREETAM PIPES SYNDICATE LLP
Regd Office: Suite No.S-1, II Floor, Narainsingh Mansion, 94/43 Sembudoss Street, George Town, Chennai 600001, Tamilnadu (India)

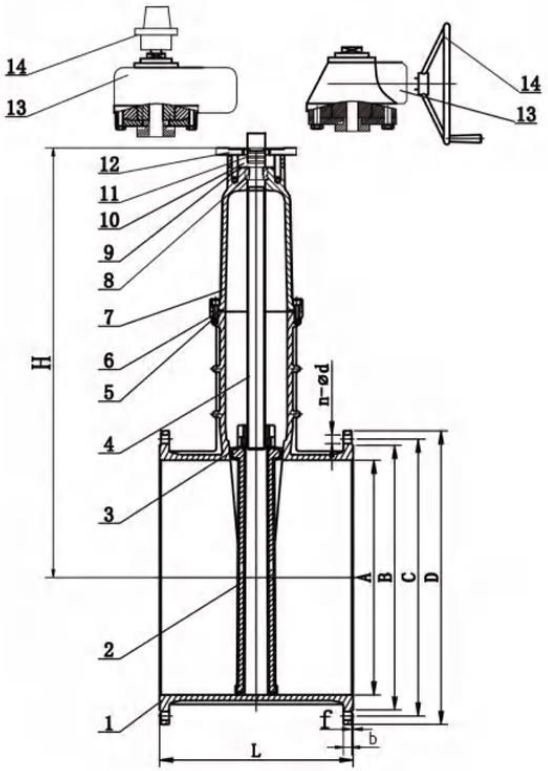

DI Resilient Seated Gate Valve Technical Data		
No.	**Description**	**Specification**
1	Nominal Dia	DN700-DN1200
2	Nominal Pressure	PN10 / PN16
3	Valve design Standard	IS:14846 / BS5163
4	Face to face Standard	IS:14846 / BS5163 / DIN 3202 F4
5	Flange Standard Conformity	IS:1538 Tbl 4&6 / IS:9523 PN10
6	Testing Standard	EN12266-1
7	Epoxy Coating	Epoxy powder coating RAL5005 with minimum thickness of 250 microns inside and outside.
8	Working Temperature(Max)	120°C
9	Casting Marking	DN** GGG50 PN16 PREETAM Heat No.

Parts & Materials		
No	**Part**	**Material**
1	Body	Ductile Iron GGG50
2	Wedge	Ductile Iron GGG50 + EPDM
3	Stem Nut	Brass
4	Stem	SS420
5	Bolts	CS Gr 12.9
6	Gasket	EPDM
7	Bonnet	Ductile Iron GGG50
8	Locating Ring	Brass
9	O Ring	EPDM
10	Gland	Ductile Iron GGG50
11	O Ring	EPDM
12	Bolts & Nuts	CS / SSA2-70
13	Spur/Bevel Gear	Ductile Iron GGG50
14	Cap/Wheel	Ductile Iron GGG50

PREETAM PIPES SYNDICATE LLP
Regd Office: Suite No.S-1, II Floor, Narainsingh Mansion, 94/43 Sembudoss Street, George Town, Chennai 600001, Tamilnadu (India)

DN	A	L	D	C	n-d	b	f	B	H
700	700	610	895	840	24-31	32.5	5	794	1320
750	700	610	960	900	24-31	32.5	5	854	1320
800	800	660	1015	950	24-34	35	5	901	1490
900	900	711	1115	1050	28-34	37.5	5	1001	1675
1000	1000	813	1230	1160	28-37	40	5	1112	1850
1100	1100	813	1340	1270	32-37	42	5	1218	2050
1200	1200	1015	1455	1380	32-40	45	5	1328	2160

Notes:

1) *All dimensions in mm*
2) *Standard tolerance as mentioned in IS:14846 applicable*
3) *We reserve the right to change without any prior notice*
4) *Other Flange Dimensions available on request.*